PAYMENT MANAGEMENT PROCESS FLOWS

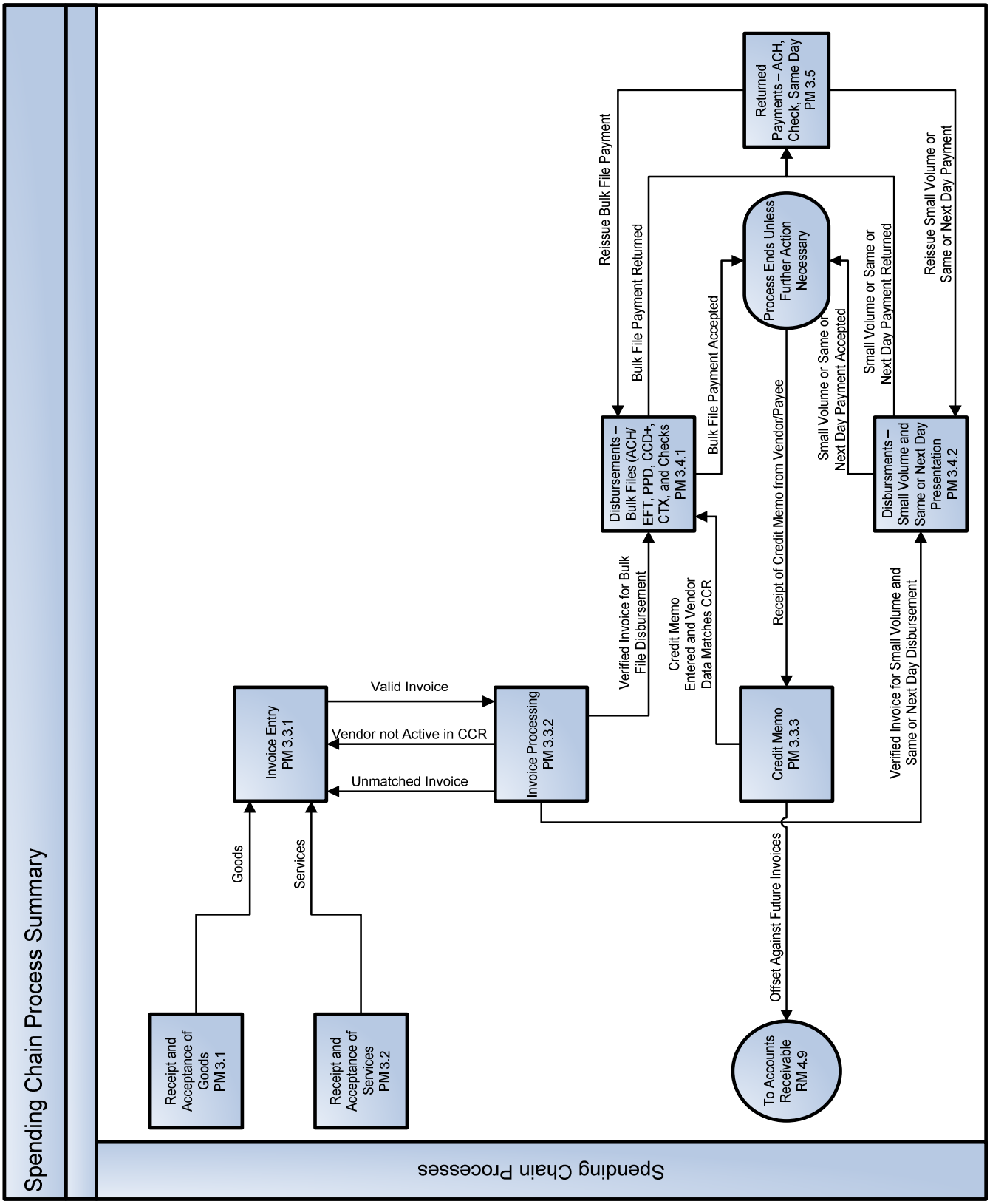
Spending Chain Process Summary
Spending Chain Processes
Receipt and Acceptance of Goods PM 3.1
Receipt and Acceptance of Services PM 3.2
Goods
Services
Invoice Entry PM 3.3.1
Valid Invoice
Vendor not Active in CCR
Unmatched Invoice
Invoice Processing PM 3.3.2
Verified Invoice for Bulk File Disbursement
Credit Memo Entered and Vendor Data Matches CCR
Disbursements – Bulk Files (ACH/ EFT, PPD, CCD+, CTX, and Checks PM 3.4.1
Bulk File Payment Accepted
Bulk File Payment Returned
Reissue Bulk File Payment
Process Ends Unless Further Action Necessary
Returned Payments – ACH, Check, Same Day PM 3.5
Receipt of Credit Memo from Vendor/Payee
Credit Memo PM 3.3.3
Small Volume or Same or Next Day Payment Accepted
Small Volume or Same or Next Day Payment Returned
Reissue Small Volume or Same or Next Day Payment
Disbursments – Small Volume and Same or Next Day Presentation PM 3.4.2
Verified Invoice for Small Volume and Same or Next Day Disbursement
Offset Against Future Invoices
To Accounts Receivable RM 4.9

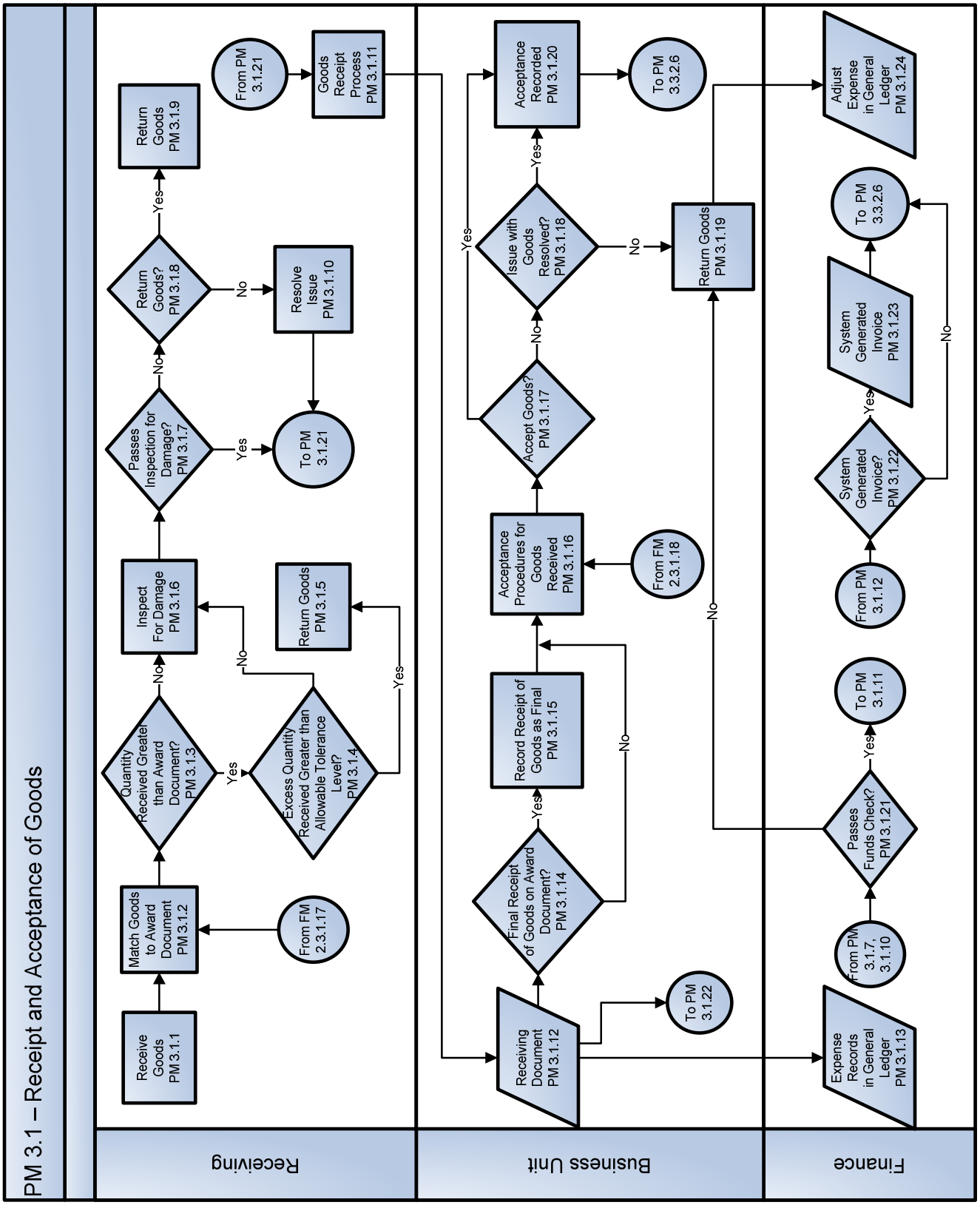
PM 3.1 – Receipt and Acceptance of Goods
Receiving
Business Unit
Finance
Receive Goods PM 3.1.1
Match Goods to Award Document PM 3.1.2
From FM 2.3.1.17
Quantity Received Greater than Award Document? PM 3.1.3
Yes
No
Excess Quantity Received Greater than Allowable Tolerance Level? PM 3.1.4
Yes
No
Return Goods PM 3.1.5
Inspect For Damage PM 3.1.6
Passes Inspection for Damage? PM 3.1.7
Yes
No
To PM 3.1.21
Return Goods? PM 3.1.8
No
Yes
Resolve Issue PM 3.1.10
Return Goods PM 3.1.9
From PM 3.1.21
Goods Receipt Process PM 3.1.11
Receiving Document PM 3.1.12
To PM 3.1.22
Final Receipt of Goods on Award Document? PM 3.1.14
Yes
No
Record Receipt of Goods as Final PM 3.1.15
Acceptance Procedures for Goods Received PM 3.1.16
From FM 2.3.1.18
Accept Goods? PM 3.1.17
Yes
No
Issue with Goods Resolved? PM 3.1.18
Yes
No
Return Goods PM 3.1.19
Acceptance Recorded PM 3.1.20
To PM 3.3.2.6
Expense Records in General Ledger PM 3.1.13
From PM 3.1.7, 3.1.10
Passes Funds Check? PM 3.1.21
Yes
To PM 3.1.11
From PM 3.1.12
System Generated Invoice? PM 3.1.22
Yes
No
System Generated Invoice PM 3.1.23
To PM 3.3.2.6
Adjust Expense in General Ledger PM 3.1.24

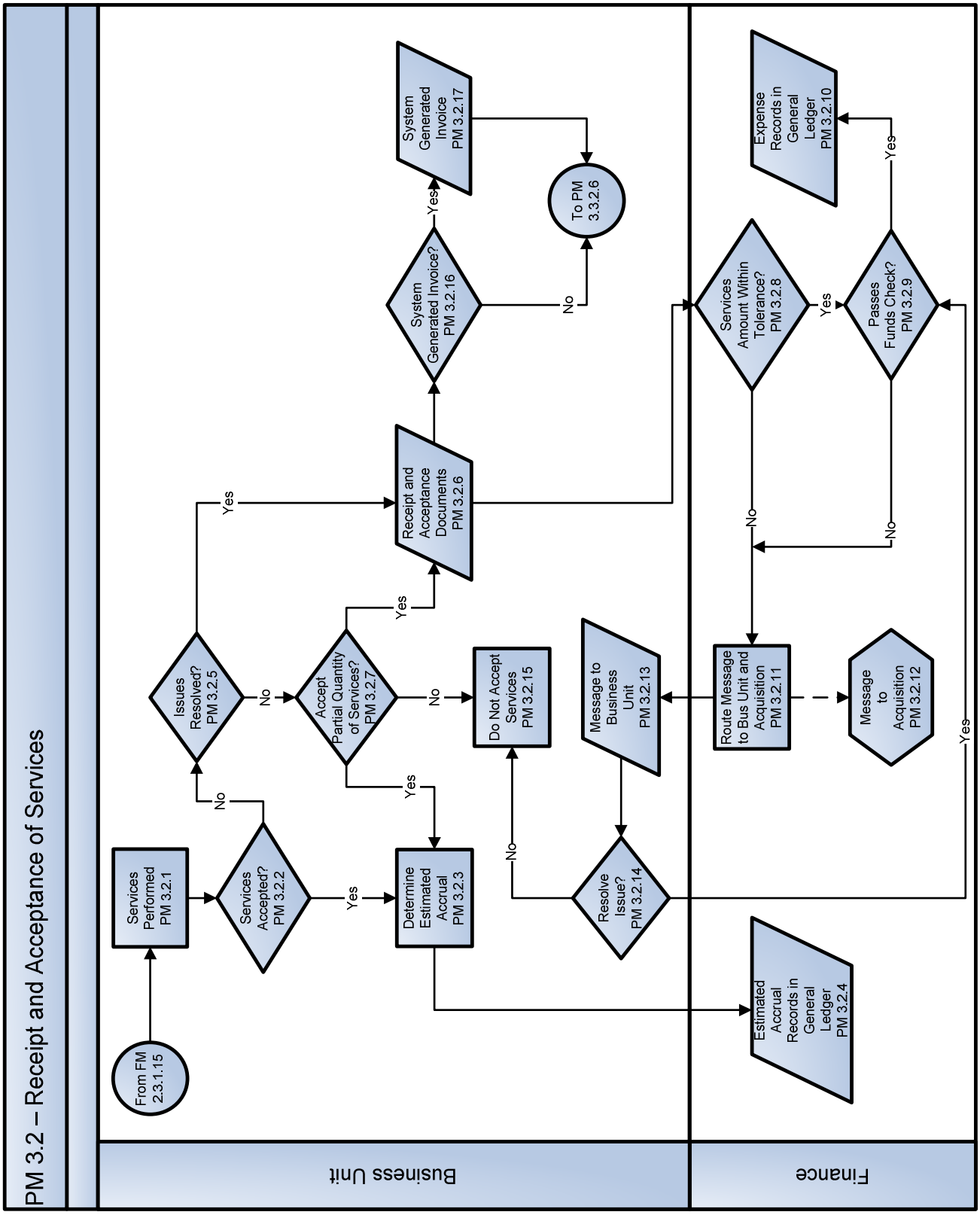
PM 3.2 – Receipt and Acceptance of Services
Business Unit
Finance
From FM 2.3.1.15
Services Performed PM 3.2.1
Services Accepted? PM 3.2.2
Yes
No
Determine Estimated Accrual PM 3.2.3
Issues Resolved? PM 3.2.5
No
Yes
Accept Partial Quantity of Services? PM 3.2.7
No
Yes
Do Not Accept Services PM 3.2.15
Receipt and Acceptance Documents PM 3.2.6
System Generated Invoice? PM 3.2.16
Yes
No
System Generated Invoice PM 3.2.17
To PM 3.3.2.6
Resolve Issue? PM 3.2.14
No
Yes
Message to Business Unit PM 3.2.13
Estimated Accrual Records in General Ledger PM 3.2.4
Services Amount Within Tolerance? PM 3.2.8
Yes
No
Route Message to Bus Unit and Acquisition PM 3.2.11
Message to Acquisition PM 3.2.12
Passes Funds Check? PM 3.2.9
Yes
No
Expense Records in General Ledger PM 3.2.10

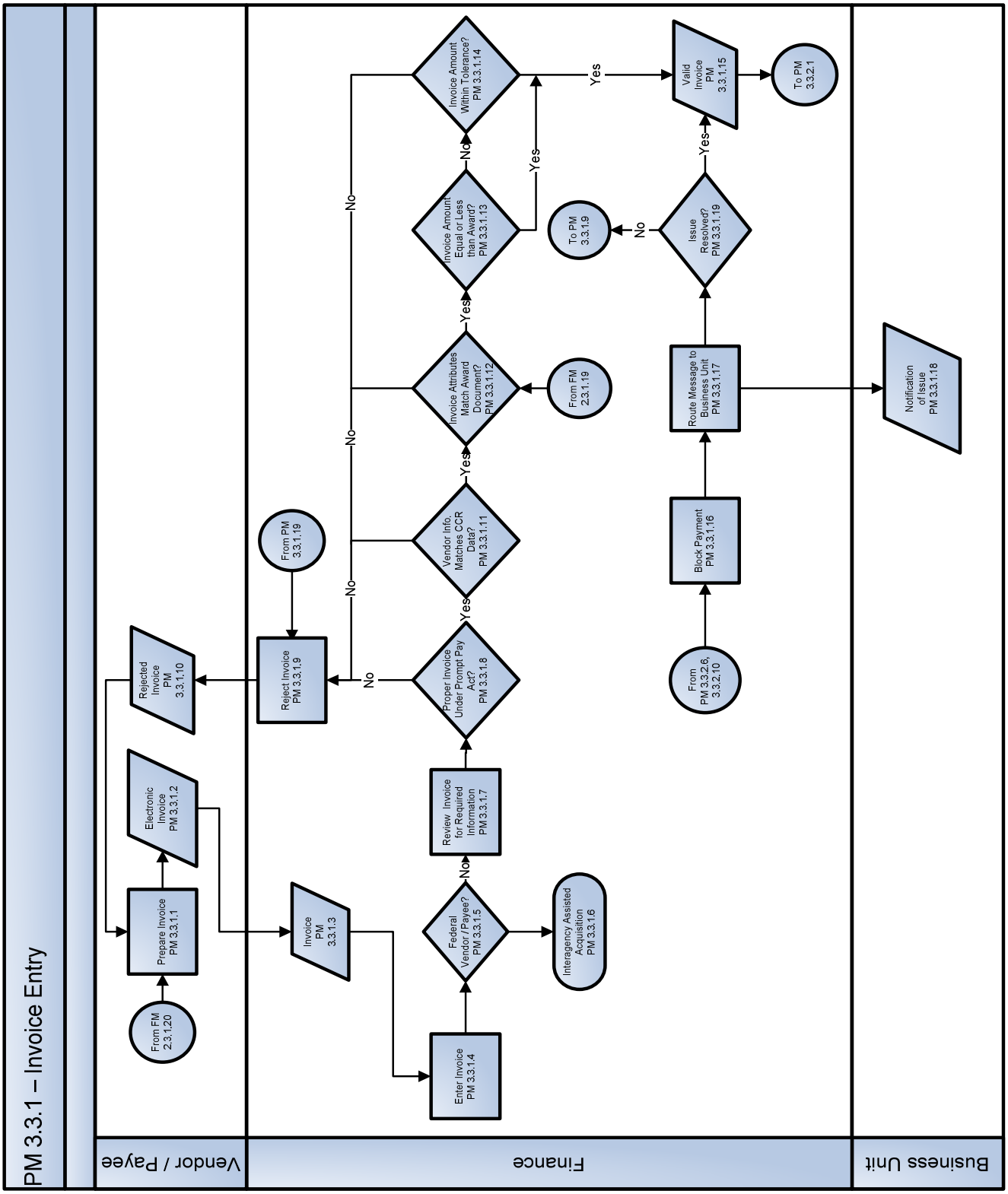
PM 3.3.1 – Invoice Entry
Vendor / Payee
Finance
Business Unit
From FM 2.3.1.20
Prepare Invoice PM 3.3.1.1
Electronic Invoice PM 3.3.1.2
Rejected Invoice PM 3.3.1.10
Invoice PM 3.3.1.3
Enter Invoice PM 3.3.1.4
Federal Vendor / Payee? PM 3.3.1.5
No
Interagency Assisted Acquisition PM 3.3.1.6
Review Invoice for Required Information PM 3.3.1.7
Proper Invoice Under Prompt Pay Act? PM 3.3.1.8
Yes
No
Reject Invoice PM 3.3.1.9
From PM 3.3.1.19
Vendor Info. Matches CCR Data? PM 3.3.1.11
Yes
No
Invoice Attributes Match Award Document? PM 3.3.1.12
From FM 2.3.1.19
Yes
No
Invoice Amount Equal or Less than Award? PM 3.3.1.13
To PM 3.3.1.9
Yes
No
Invoice Amount Within Tolerance? PM 3.3.1.14
Yes
No
Valid Invoice PM 3.3.1.15
To PM 3.3.2.1
From PM 3.3.2.6, 3.3.2.10
Block Payment PM 3.3.1.16
Route Message to Business Unit PM 3.3.1.17
Issue Resolved? PM 3.3.1.19
Yes
No
Notification of Issue PM 3.3.1.18

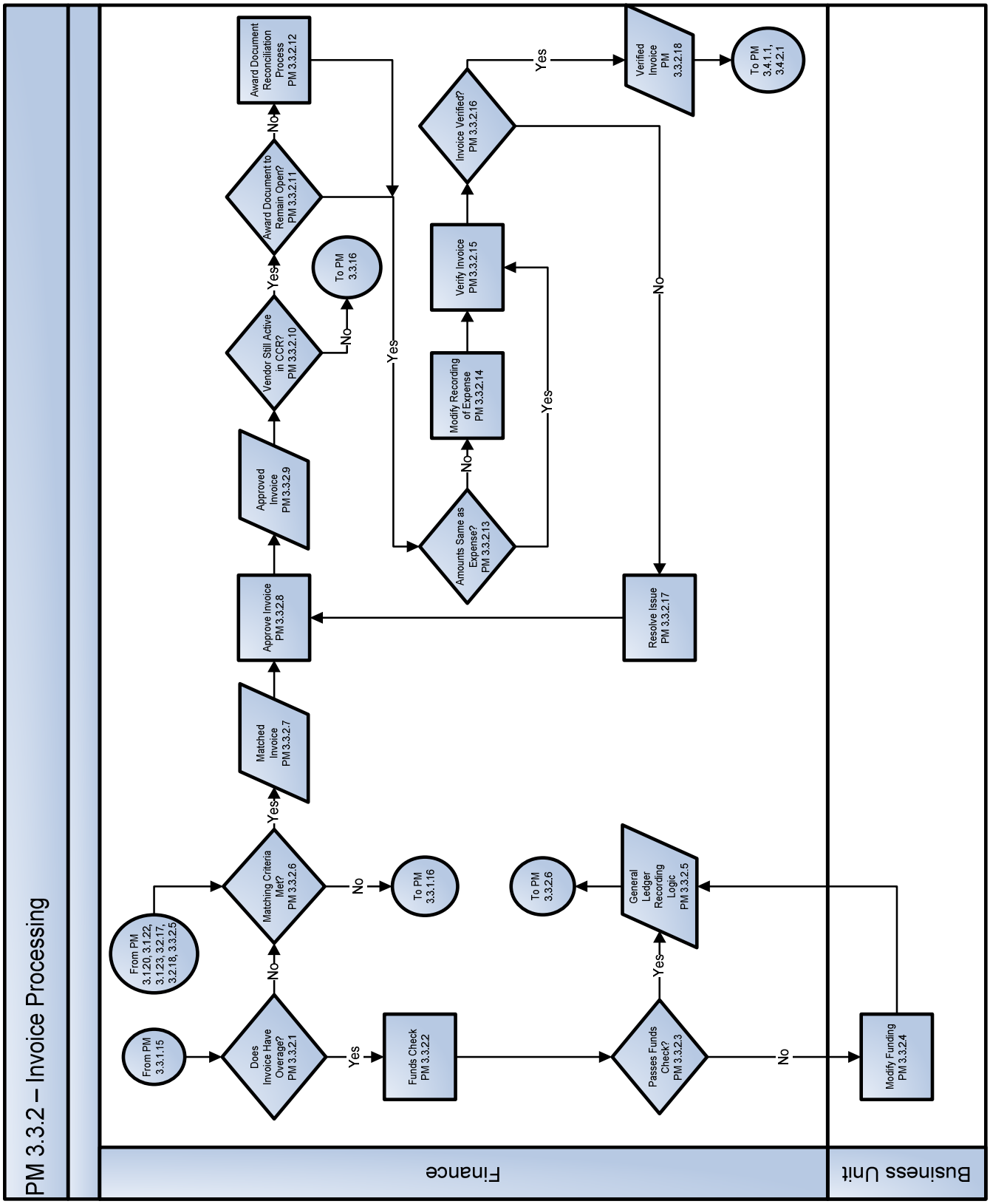
PM 3.3.2 – Invoice Processing
Finance
Business Unit
From PM 3.3.1.15
From PM 3.1.20, 3.1.22, 3.1.23, 3.2.17, 3.2.18, 3.3.2.5
Does Invoice Have Overage? PM 3.3.2.1
Yes
No
Funds Check PM 3.3.2.2
Matching Criteria Met? PM 3.3.2.6
No
To PM 3.3.1.16
Yes
Matched Invoice PM 3.3.2.7
Approve Invoice PM 3.3.2.8
Approved Invoice PM 3.3.2.9
Vendor Still Active in CCR? PM 3.3.2.10
No
To PM 3.3.16
Yes
Award Document to Remain Open? PM 3.3.2.11
No
Award Document Reconciliation Process PM 3.3.2.12
Yes
Passes Funds Check? PM 3.3.2.3
Yes
No
General Ledger Recording Logic PM 3.3.2.5
To PM 3.3.2.6
Modify Funding PM 3.3.2.4
Amounts Same as Expense? PM 3.3.2.13
No
Yes
Modify Recording of Expense PM 3.3.2.14
Verify Invoice PM 3.3.2.15
Invoice Verified? PM 3.3.2.16
Yes
No
Resolve Issue PM 3.3.2.17
Verified Invoice PM 3.3.2.18
To PM 3.4.1.1, 3.4.2.1

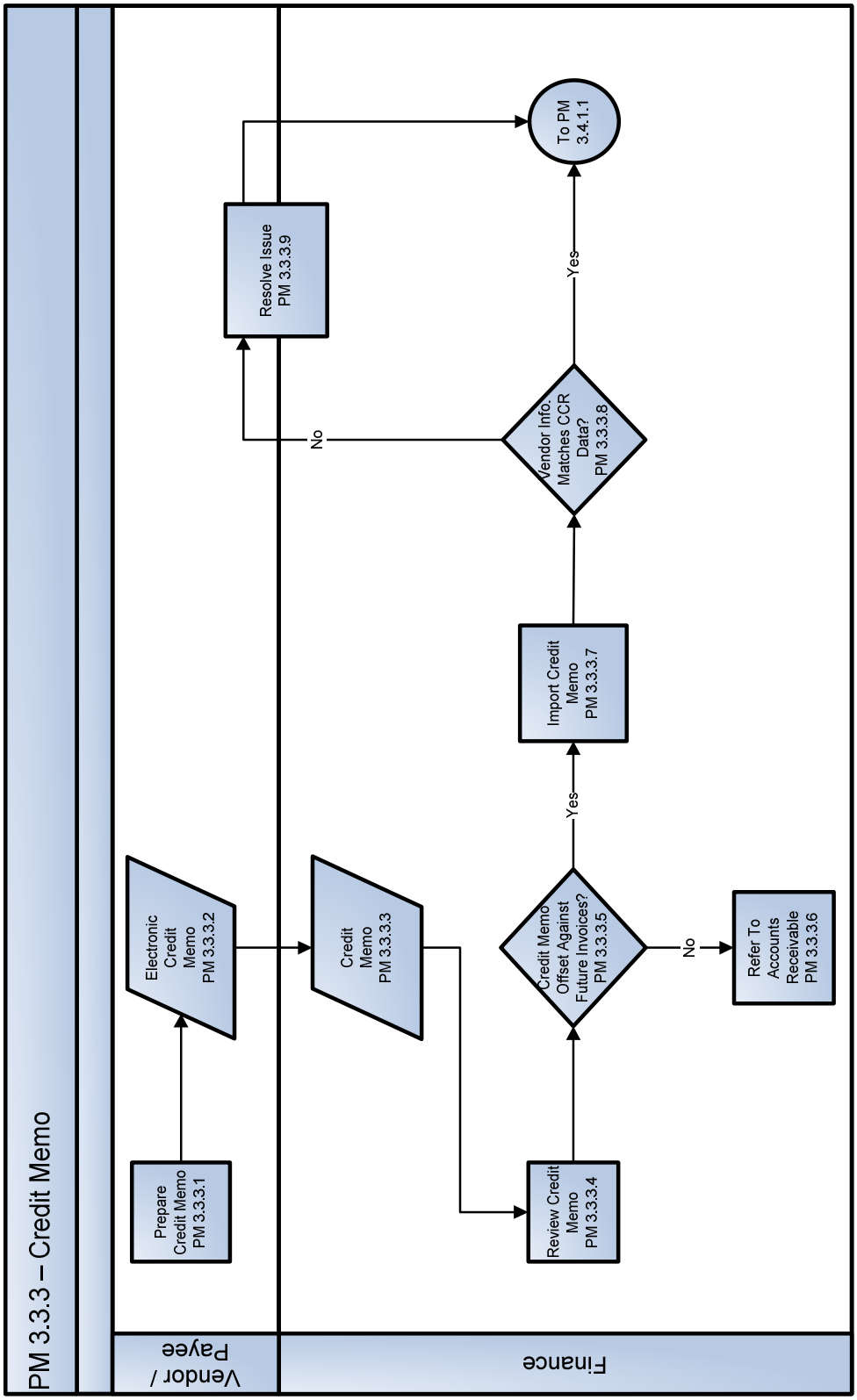
PM 3.3.3 – Credit Memo
Vendor / Payee
Finance
Prepare Credit Memo PM 3.3.3.1
Electronic Credit Memo PM 3.3.3.2
Credit Memo PM 3.3.3.3
Review Credit Memo PM 3.3.3.4
Credit Memo Offset Against Future Invoices? PM 3.3.3.5
No
Refer To Accounts Receivable PM 3.3.3.6
Yes
Import Credit Memo PM 3.3.3.7
Vendor Info. Matches CCR Data? PM 3.3.3.8
No
Resolve Issue PM 3.3.3.9
Yes
To PM 3.4.1.1

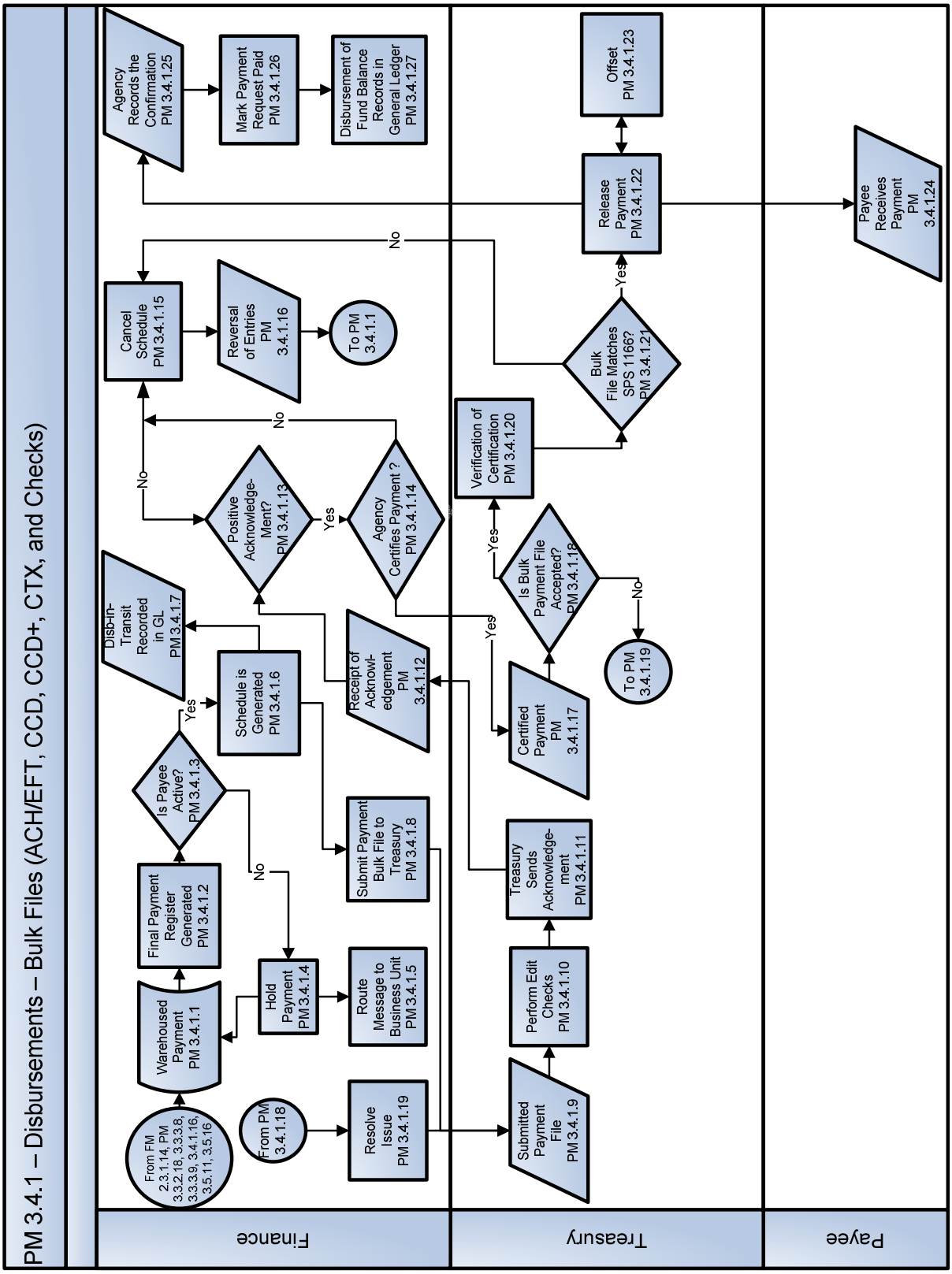
PM 3.4.1 – Disbursements – Bulk Files (ACH/EFT, CCD, CCD+, CTX, and Checks)
Finance
Treasury
Payee
From FM 2.3.1.14, PM 3.3.2.18, 3.3.3.8, 3.3.3.9, 3.4.1.16, 3.5.11, 3.5.16
Warehoused Payment PM 3.4.1.1
Final Payment Register Generated PM 3.4.1.2
Is Payee Active? PM 3.4.1.3
Yes
No
Disb-in-Transit Recorded in GL PM 3.4.1.7
Schedule is Generated PM 3.4.1.6
Hold Payment PM 3.4.1.4
Route Message to Business Unit PM 3.4.1.5
From PM 3.4.1.18
Resolve Issue PM 3.4.1.19
Submit Payment Bulk File to Treasury PM 3.4.1.8
Receipt of Acknowl-edgement PM 3.4.1.12
Positive Acknowledge-Ment? PM 3.4.1.13
Yes
No
Agency Certifies Payment ? PM 3.4.1.14
Cancel Schedule PM 3.4.1.15
Reversal of Entries PM 3.4.1.16
To PM 3.4.1.1
Agency Records the Confirmation PM 3.4.1.25
Mark Payment Request Paid PM 3.4.1.26
Disbursement of Fund Balance Records in General Ledger PM 3.4.1.27
Submitted Payment File PM 3.4.1.9
Perform Edit Checks PM 3.4.1.10
Treasury Sends Acknowledge-ment PM 3.4.1.11
Certified Payment PM 3.4.1.17
Is Bulk Payment File Accepted? PM 3.4.1.18
Yes
No
To PM 3.4.1.19
Verification of Certification PM 3.4.1.20
Bulk File Matches SPS 1166? PM 3.4.1.21
Yes
No
Release Payment PM 3.4.1.22
Offset PM 3.4.1.23
Payee Receives Payment PM 3.4.1.24

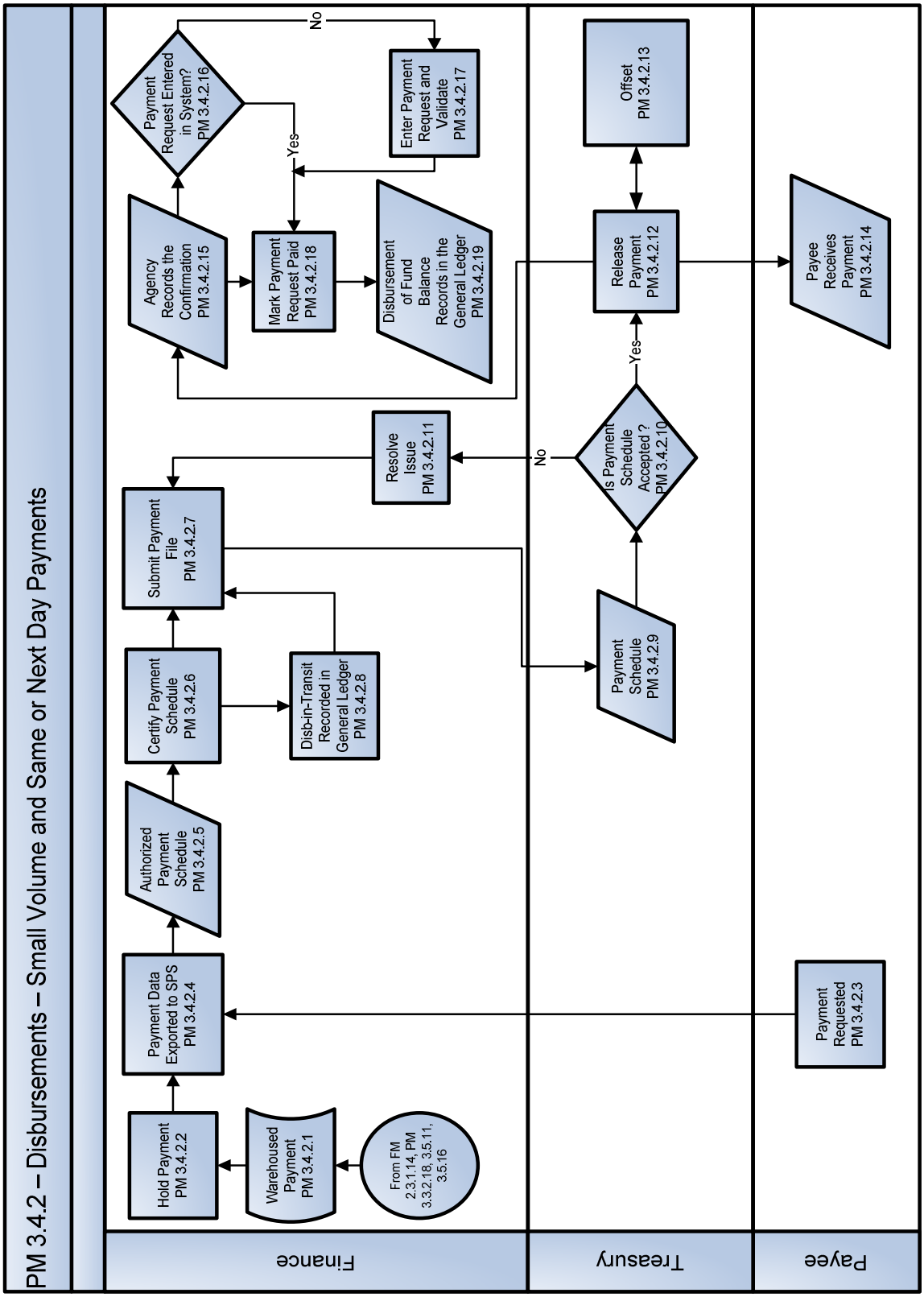
PM 3.4.2 – Disbursements – Small Volume and Same or Next Day Payments
Finance
Treasury
Payee
From FM 2.3.1.14, PM 3.3.2.18, 3.5.11, 3.5.16
Warehoused Payment PM 3.4.2.1
Hold Payment PM 3.4.2.2
Payment Data Exported to SPS PM 3.4.2.4
Authorized Payment Schedule PM 3.4.2.5
Certify Payment Schedule PM 3.4.2.6
Disb-in-Transit Recorded in General Ledger PM 3.4.2.8
Submit Payment File PM 3.4.2.7
Resolve Issue PM 3.4.2.11
Payment Schedule PM 3.4.2.9
Is Payment Schedule Accepted ? PM 3.4.2.10
No
Yes
Release Payment PM 3.4.2.12
Offset PM 3.4.2.13
Payment Requested PM 3.4.2.3
Payee Receives Payment PM 3.4.2.14
Agency Records the Confirmation PM 3.4.2.15
Payment Request Entered in System? PM 3.4.2.16
No
Yes
Enter Payment Request and Validate PM 3.4.2.17
Mark Payment Request Paid PM 3.4.2.18
Disbursement of Fund Balance Records in the General Ledger PM 3.4.2.19

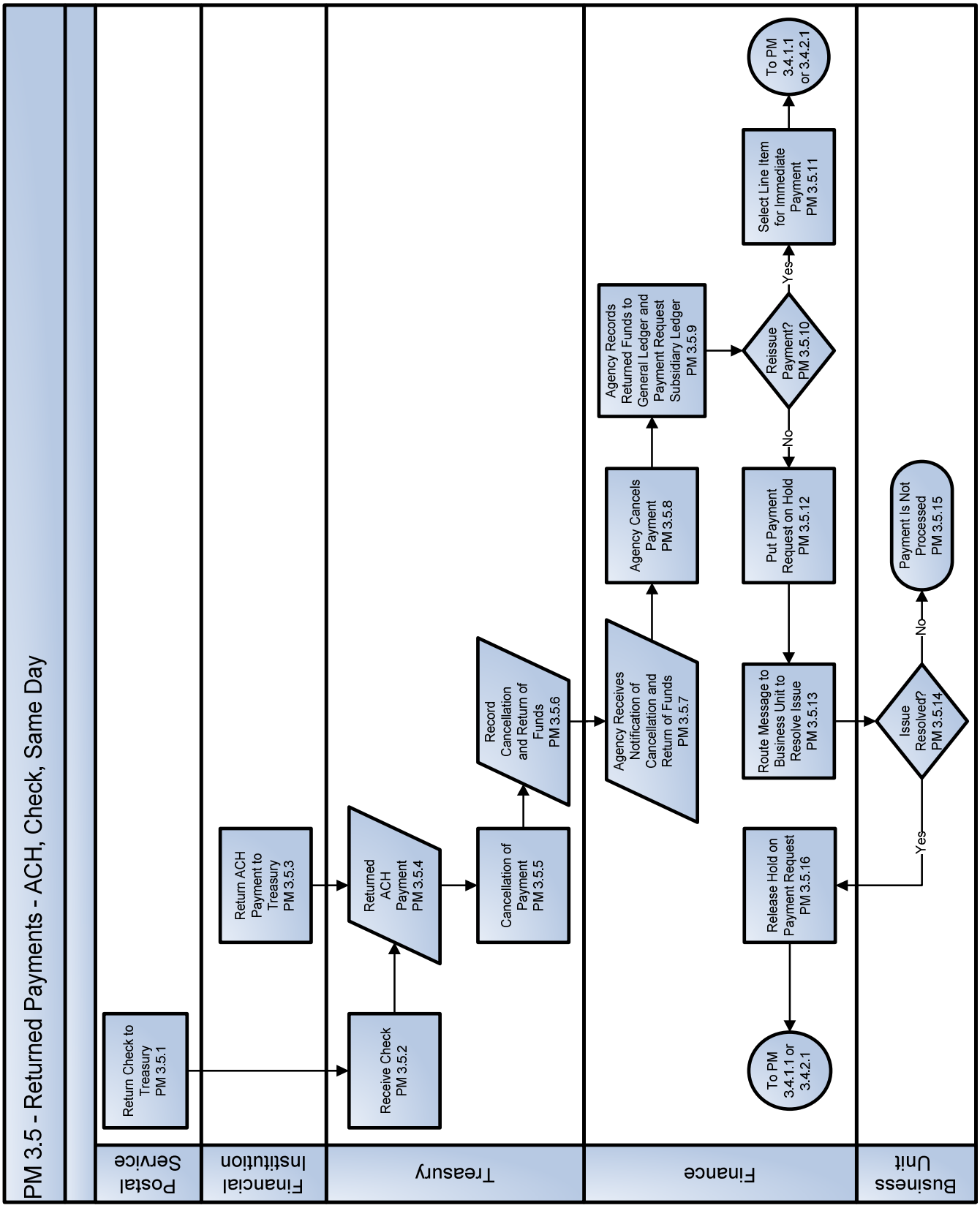
PM 3.5 - Returned Payments - ACH, Check, Same Day
Postal Service
Financial Institution
Treasury
Finance
Business Unit
Return Check to Treasury PM 3.5.1
Return ACH Payment to Treasury PM 3.5.3
Receive Check PM 3.5.2
Returned ACH Payment PM 3.5.4
Cancellation of Payment PM 3.5.5
Record Cancellation and Return of Funds PM 3.5.6
Agency Receives Notification of Cancellation and Return of Funds PM 3.5.7
Agency Cancels Payment PM 3.5.8
Agency Records Returned Funds to General Ledger and Payment Request Subsidiary Ledger PM 3.5.9
Reissue Payment? PM 3.5.10
Yes
No
Select Line Item for Immediate Payment PM 3.5.11
To PM 3.4.1.1 or 3.4.2.1
Put Payment Request on Hold PM 3.5.12
Route Message to Business Unit to Resolve Issue PM 3.5.13
Release Hold on Payment Request PM 3.5.16
To PM 3.4.1.1 or 3.4.2.1
Issue Resolved? PM 3.5.14
Yes
No
Payment Is Not Processed PM 3.5.15